Electrolux PROFESSIONAL

Spin Dryers
Vegetable Washer & Spin Dryer, 2/6kg - Programmable

ITEM #

MODEL #

NAME #

SIS #

AIA #

660071 (LVA100D) Vegetable Washer & Spin Dryer, 2/6 Kg - programmable - 230V/1/50

Short Form Specification

Item No.

Combi machine to wash and dry in a unique compact footprint. Constructed in 304 AISI stainless steel, it can operate in automatic or manual mode. Automatic mode: 3 automatic washing cycles, with or without sanitation, pump speed personalization and spin exclusion. Manual mode: cycle time, including continuous mode, and pump speed set by the operator. The washing effect is obtained by combining basket rotation and water turbulence generated by a two speeds pump. Equipped with a 500 ml frontal tank, to be filled with the sanitising product, automatically introduced via peristaltic pump during the washing. Flat and waterproof (IPX5) touch button control panel. Lid safety micro switch prevents operation when the lid is open during use. Self braking motor is stopping the basket rotation immediately. Very efficient and easy to clean filter system. Self-cleaning cycle and rounded corners of the well facilitate cleaning operations. Supplied with 304 AISI stainless steel basket with small squared holes (5x5 mm). Load per cycle: 2-3 kg (light vegetables); 6 kg (heavy vegetables). Washing speed: 60 rpm - Spin drying speed: 270 rpm.

APPROVAL:

Main Features

- Lid microswitch prevents the appliance from operating with the lid open.
- Electromagnetic device stops the machine in 2 seconds if lid is lifted during operation.
- Easy to clean, efficient filter system.
- Automatic operating mode:
  - 3 washing cycles with or without automatic sanitizing function (with the possibility to set pump speed and to exclude the spinning in case of heavy vegetables).
  - well self-cleaning cycle.
- Self cleaning cycle of the well.
- Load per cycle: 2-3 kg (light vegetables); 6 kg (heavy vegetables).
- Two turbulence levels (soft for light vegetables, and strong for heavy vegetables).
- Immersion wash or spray wash (tub filled at low level).
- Drain through solenoid valve.
- Peristaltic dispenser to add sanitizing during immersion wash.
- Supplied with:
  - AISI 304 stainless steel basket with small square roundish holes (5x5 mm).
- Manual operating mode:
  operator can set the time for each step and the pump speed. Continuous cycle is also possible, selecting "cont" mode
- 500 ml tank placed in front of the machine to be filled with the sanitizing product.

Construction

- Bearing frame, external panelling, lid and extractable basket in 304 AISI stainless steel.
- Basket support in corrosion resistant aluminum.
- Spin rotation speed of 270 rpm.
- Two speeds pump for immersion wash and spray wash.

Included Accessories

- 1 of Basket with square holes (5x5 mm) for vegetable washer PNC 921014

Optional Accessories

- Basket with square holes (5x5 mm) for vegetable washer PNC 921014 ❑

Spin Dryers
Vegetable Washer & Spin Dryer, 2/6kg - Programmable

Front

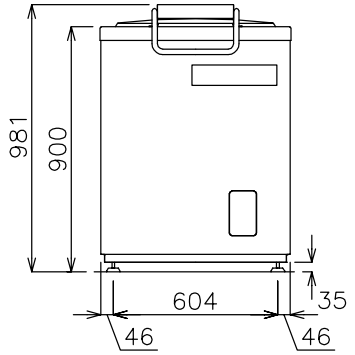

Side

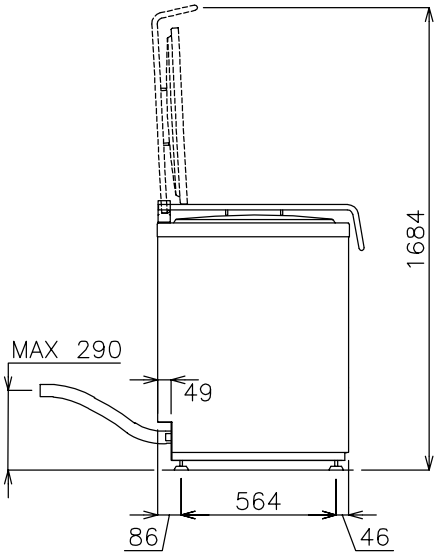

CWI1 = Cold Water inlet 1 (cleaning)
D = Drain
EI = Electrical inlet (power)

Top

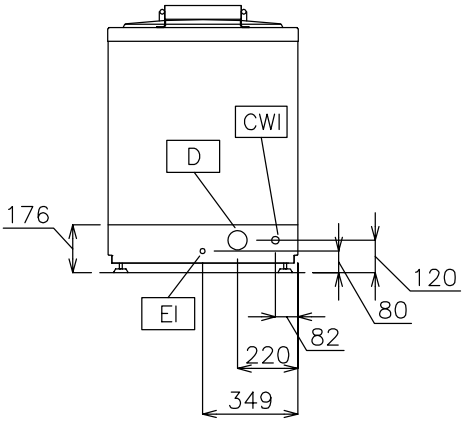

Electric

Supply voltage:	
660071 (LVA100D)	230 V/1N ph/50 Hz

Key Information:

Well Capacity:	30 lt
Usable well capacity:	30 lt
Load per cycle - light vegetables:	2-3 kg
Load per cycle - heavy vegetables:	6 kg
Spin drying rotation speed:	300 RPM
External dimensions, Width:	700 mm
External dimensions, Depth:	700 mm
External dimensions, Height:	1000 mm
Shipping weight:	116 kg

The company reserves the right to make modifications to the products without prior notice. All information correct at time of printing.